5Appendix A-ID Setting

Enable/Disable Build In 120Ω TERM Resistor

USB To CANFD Series Products comes activated in 120Ω termination resistor, it can be easily enable/disable by PCANVIEW Software through ID setting.
Go to the PCANVIEW Software ID Setting Tab As below picture shows:

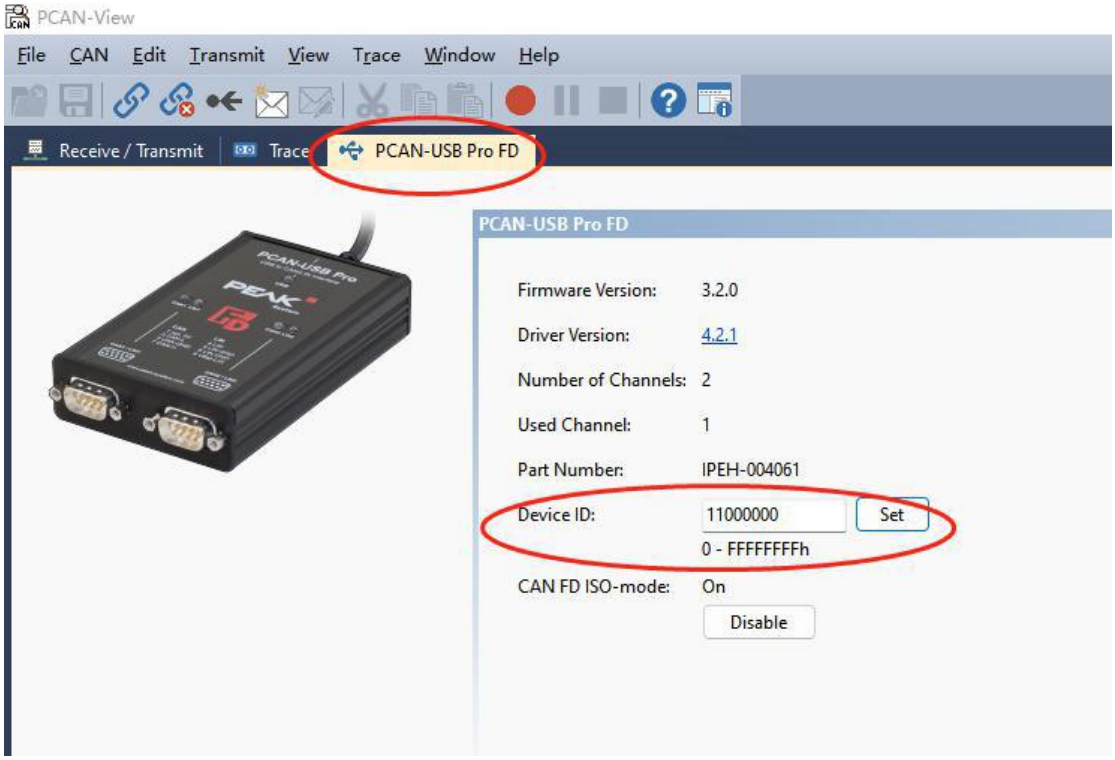

ID Setting Description is as below:

Device serial number have 4 bytes: Byte3|Byte2|Byte1|Byte0
Device serial number byte 2 used to control 2 channels of terminal resister.
BYTE2 bit0—3 control channel0--- 1: resister on 0 :terminal resister off
BYTE2 bit7—4 control channel1--- 1: resister on 0 :terminal resister off

Note: After Setting IDS, reconnect USB Cable to PC then take effect.

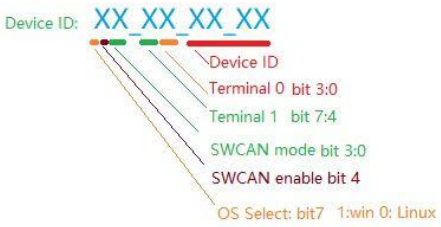

When you use device under Windows

ID	Description
80FF0000h	CAN0 TERM Enable CAN1 TERM Enable
80000000h	CAN0 TERM Disable CAN1 TERM Disable
800F0000h	CAN0 TERM Enable CAN1 TERM Disable
80F00000h	CAN0 TERM Disable CAN1 TERM Enable

When you use device Under Linux

ID	Description
08FF0000h	CAN0 TERM Enable CAN1 TERM Enable
08000000h	CAN0 TERM Disable CAN1 TERM Disable
080F0000h	CAN0 TERM Enable CAN1 TERM Disable
08F00000h	CAN0 TERM Disable CAN1 TERM Enable

Enable/Disable SW CAN Mode

USB2CANFD-X2 Channel CAN0 support SWCAN, to enable SWCAN, need to power PIN9

with 12V. PIN4 Become CANH_SW.

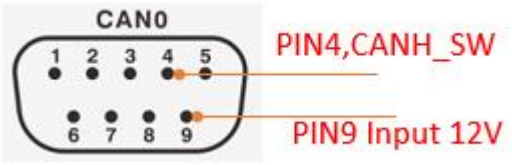

Hardware Connection Enable SWCAN

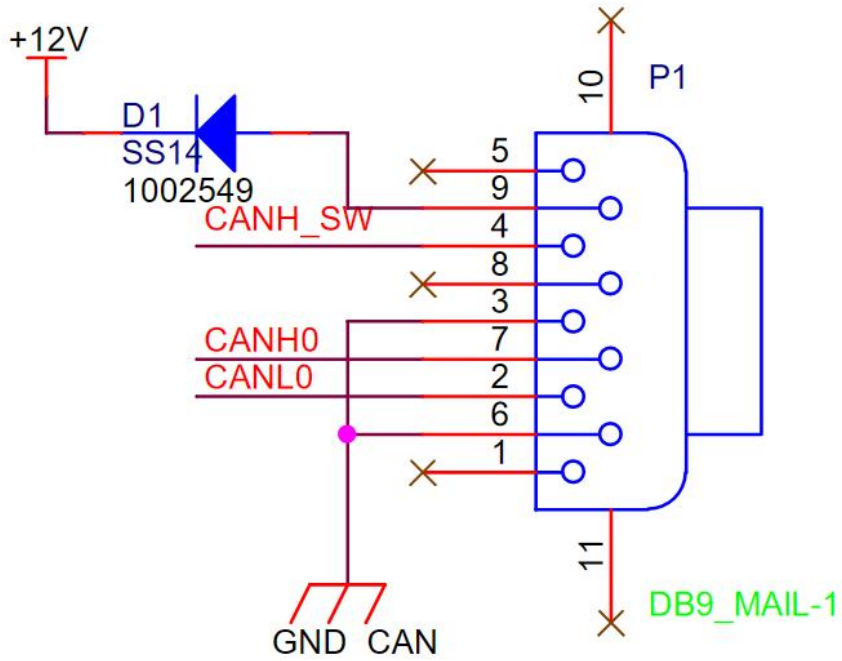

ID Setting SWCAN Working Mode

ID	SWCAN MODE:	Description
F0000000h	Mode0	0 : sleep
F1000000h	Mode1	1: high speed mode (83.33kbit/s)
F2000000h	Mode2	2: high volage wake up
F3000000h	Mode3	3: normal mode (33.33kbit/s)